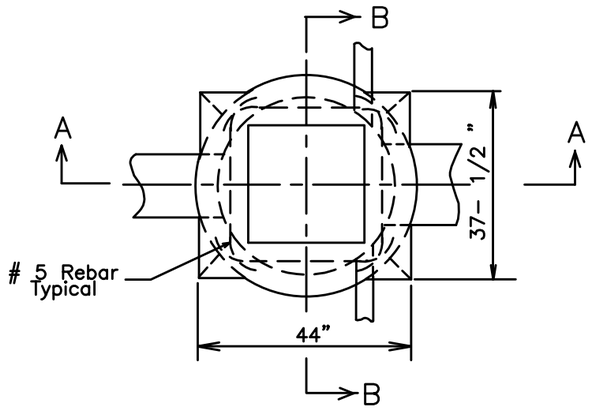

PLAN VIEW

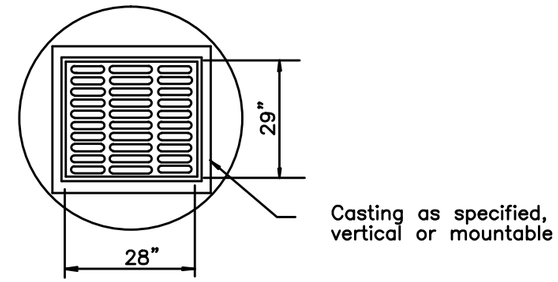

CASTING DETAIL

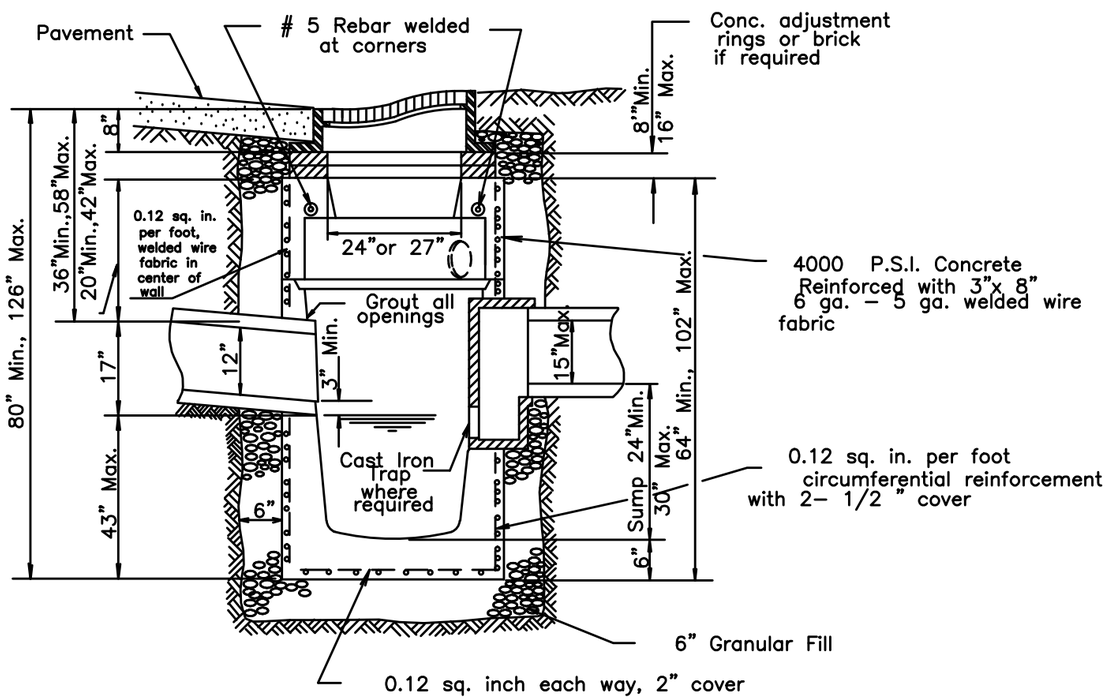

SECTION A – A

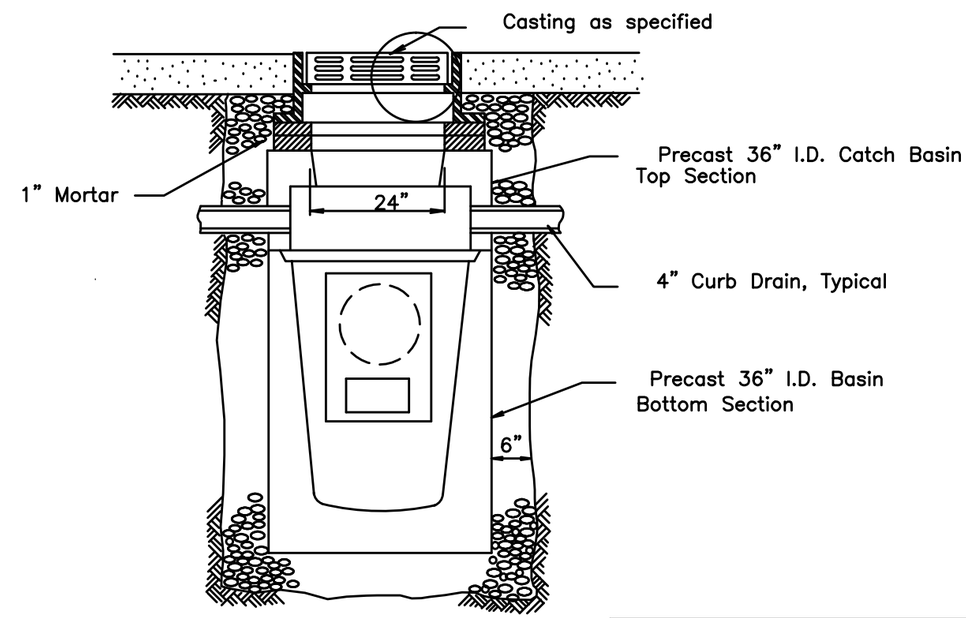

SECTION B – B

ROUND PRECAST CONCRETE CATCH BASIN

REVISIONS:	SCALE NO SCALE	DATE : DEC. 1998

UNIFORM STANDARDS: CLEVELAND --- CUYAHOGA COUNTY --- NORTHEAST OHIO REGIONAL SEWER DISTRICT